
EXALUM
METAL INDO PT

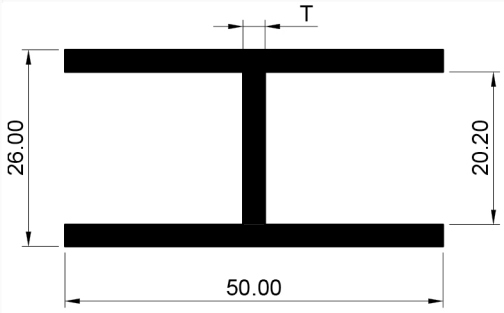

97080

T = 2.90 mm
W = 0.945 Kg/m
P = 246.200 mm

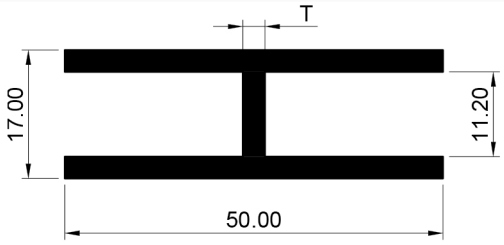

97081

T = 2.90 mm
W = 0.874 Kg/m
P = 228.200 mm

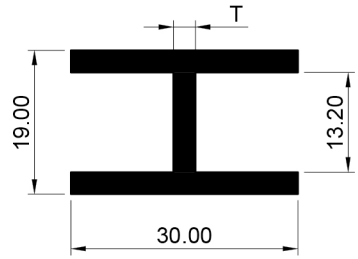

97082

T = 2.90 mm
W = 0.575 Kg/m
P = 152.200 mm

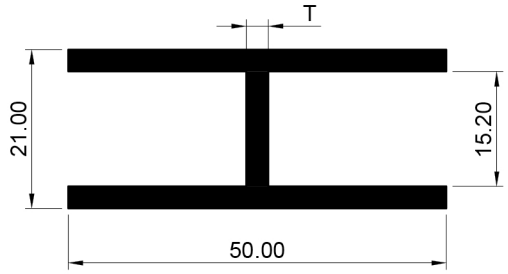

97083

T = 2.90 mm
W = 0.905 Kg/m
P = 236.200 mm

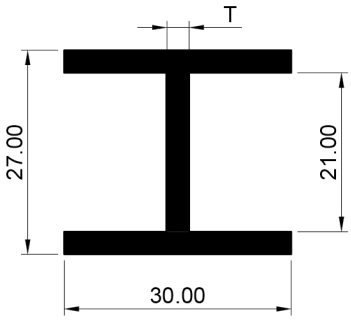

97084

T = 3.00 mm
W = 0.659 Kg/m
P = 168.000 mm

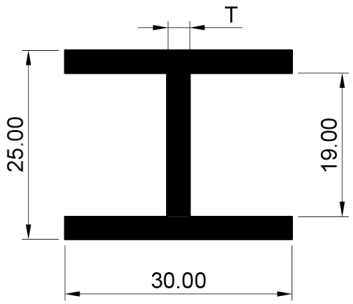

97085

T = 3.00 mm
W = 0.642 Kg/m
P = 164.000 mm

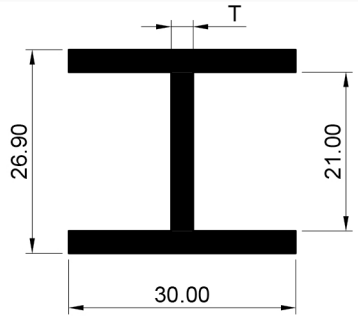

97086

T = 2.95 mm
W = 0.648 Kg/m
P = 167.900 mm

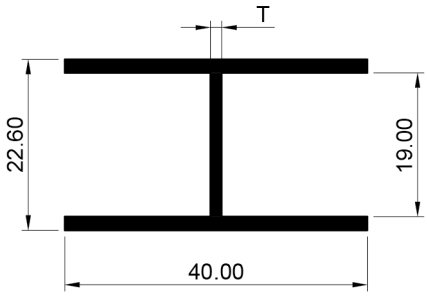

97087

T = 1.50 mm
W = 0.471 Kg/m
P = 202.200 mm

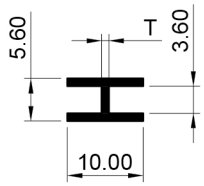

97090

T = 1.00 mm
W = 0.064 Kg/m
P = 49.200 mm

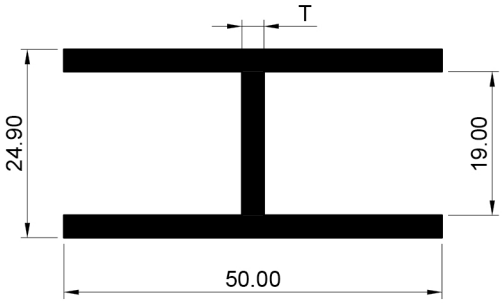

97201

T = 2.94 mm
W = 0.950 Kg/m
P = 243.920 mm

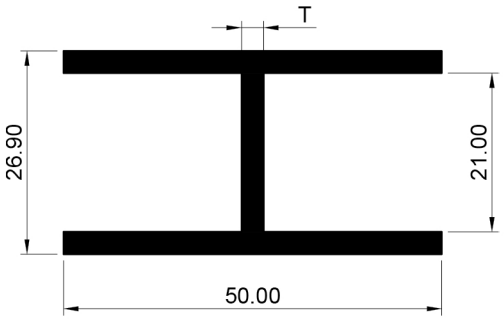

97202

T = 2.94 mm
W = 0.966 Kg/m
P = 247.920 mm

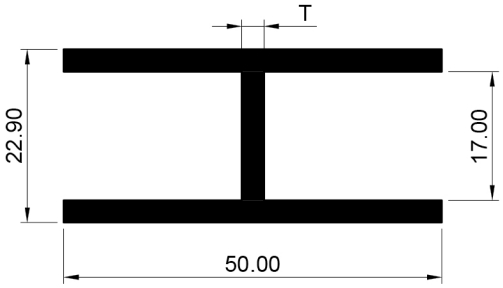

97203

T = 2.94 mm
W = 0.934 Kg/m
P = 239.920 mm

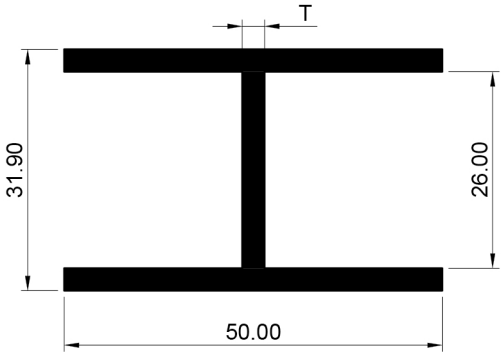

97204

T = 2.95 mm
W = 1.006 Kg/m
P = 257.920 mm

EXALUM
METAL INDO PT

Jl. Kembangan Raya No.8
Kota Jakarta Barat 11610 - Indonesia
Tel : +6221 5890 9530/31
Email: sales@exalummetal.com

www.exalummetal.com

