
EXALUM
METAL INDO PT

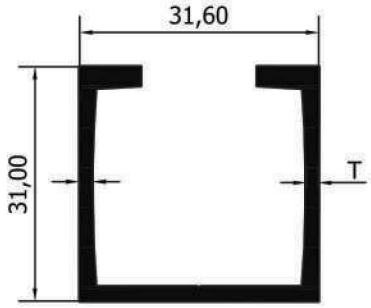

71013

T = 1.63 mm
W = 0.536 Kg/m
P = 206.857 mm

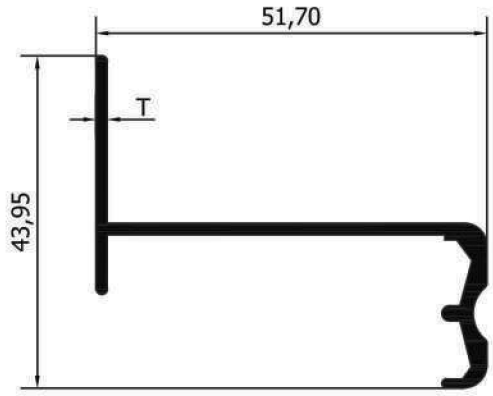

71014

T = 1.50 mm
W = 0.479 Kg/m
P = 213.922 mm

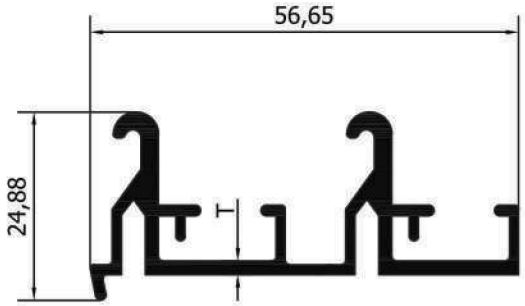

71015

T = 1.85 mm
W = 0.729 Kg/m
P = 311.276 mm

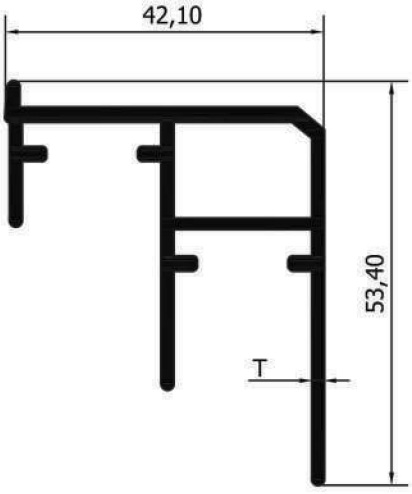

71016

T = 1.50 mm
W = 0.733 Kg/m
P = 340.811 mm

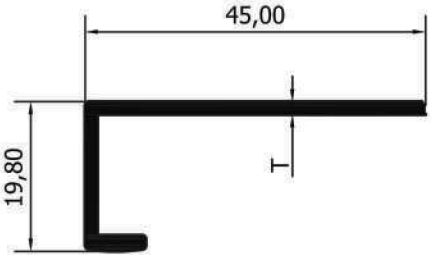

71017

T = 1.70 mm
W = 0.319 Kg/m
P = 140.848 mm

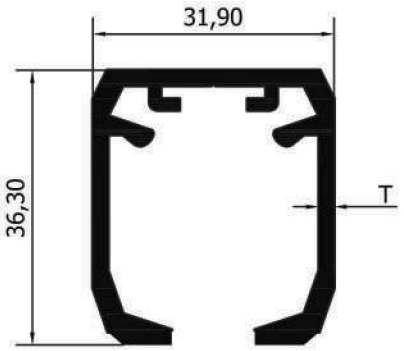

71018

T = 2.00 mm
W = 0.784 Kg/m
P = 265.393 mm

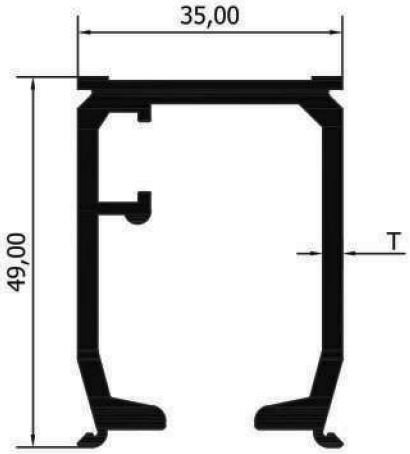

71019

T = 2.60 mm
W = 1.135 Kg/m
P = 314.477 mm

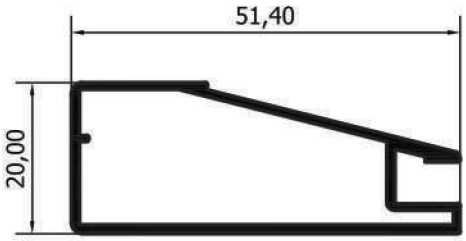

71020

W = 0.423 Kg/m
P = 283.458 mm

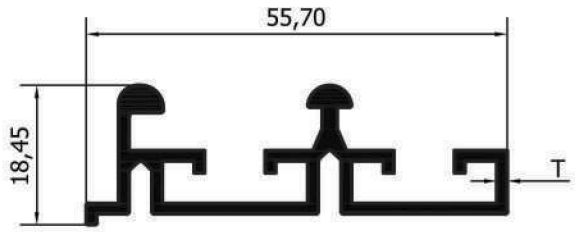

71021

T = 1.40 mm
W = 0.599 Kg/m
P = 286.936 mm

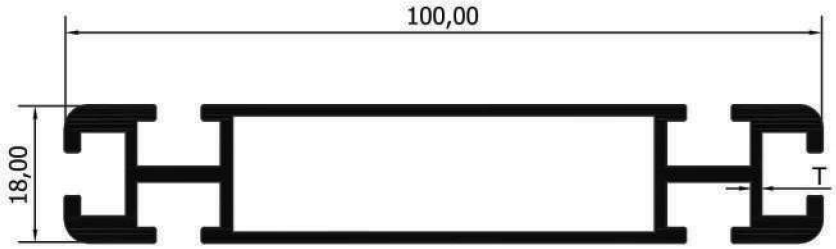

71030

T = 1.15 mm
W = 1.12 Kg/m
P = 531.989 mm

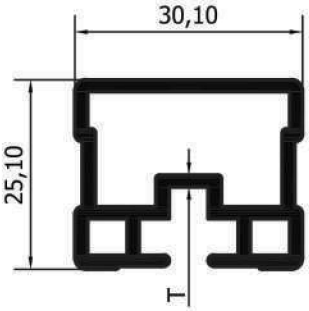

71040

T = 1.60 mm
W = 0.642 Kg/m
P = 277.619 mm

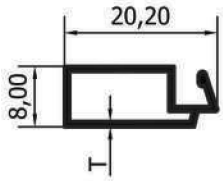

71050

T = 0.70 mm
W = 0.108 Kg/m
P = 111.134 mm

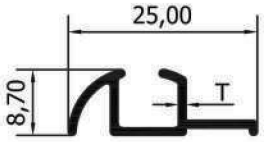

71060

T = 1.00 mm
W = 0.129 Kg/m
P = 94.183 mm

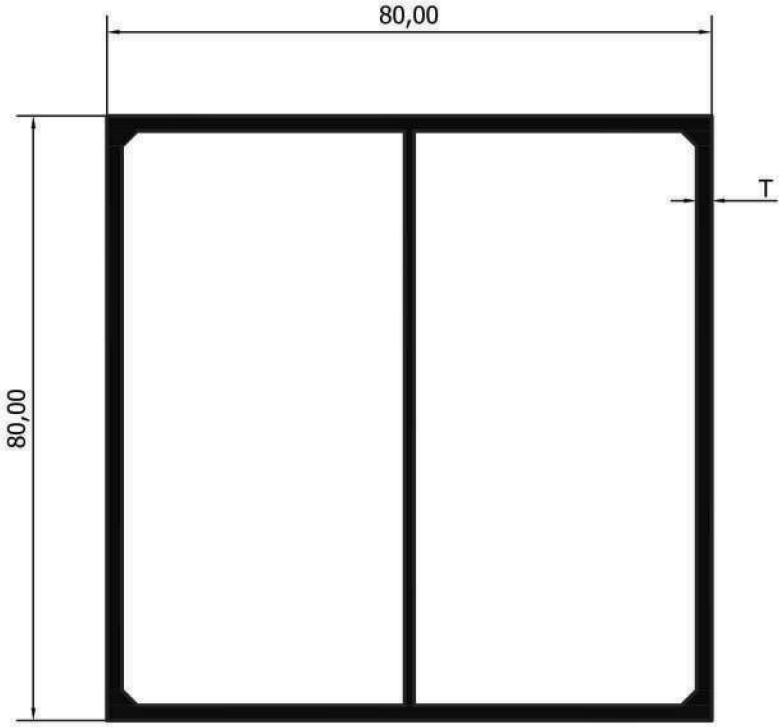

71100

T = 2.00 mm
W = 1.960 Kg/m
P = 768.914 mm

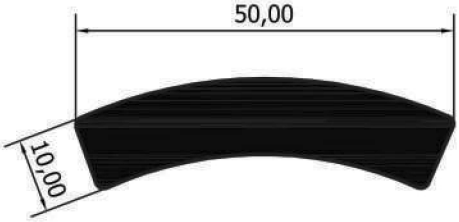

71101

T = 10.00 mm
W = 1.311 Kg/m
P = 115.168 mm

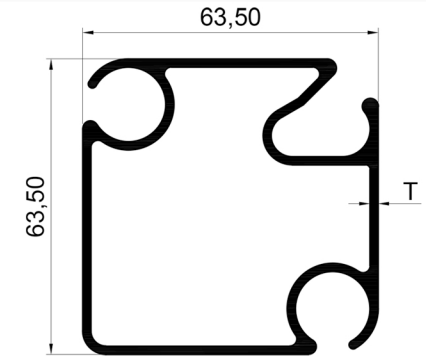

76100

T = 1.80mm
W = 1.637 Kg/m
P = 612.165 mm

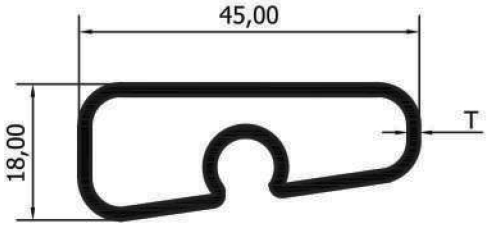

78014

T = 1.50 mm
W = 0.494 Kg/m
P = 243.381 mm

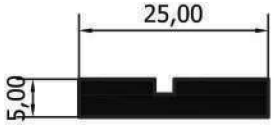

78069

T = 5.00 mm
W = 0.322 Kg/m
P = 64.000 mm

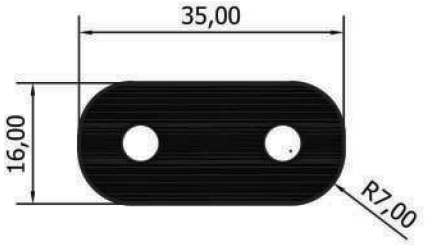

78116

T = 16.00 mm
W = 1.288 Kg/m
P = 122.655 mm

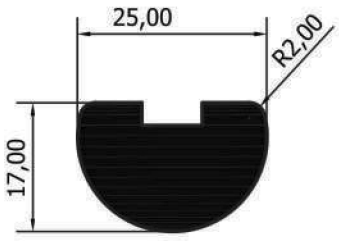

78126

T = 17.00 mm
W = 0.896 Kg/m
P = 76.988 mm

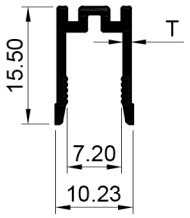

98050

(DECORATIVE)

T = 1.00 mm
W = 0.126 Kg/m
P = 88.377 mm

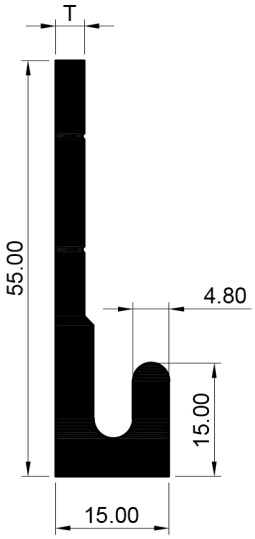

98055

(HANDLE)

T = 3.80 mm
W = 0.899 Kg/m
P = 155.459 mm

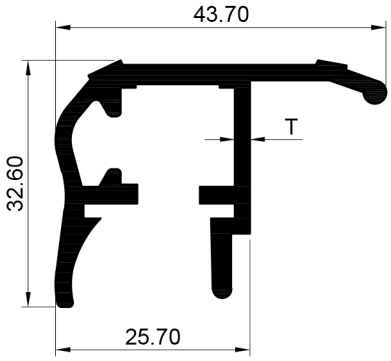

98099

(HANDLE)

T = 2.00 mm
W = 0.742 Kg/m
P = 243.117 mm

EXALUM
METAL INDO PT

Jl. Kembangan Raya No.8
Kota Jakarta Barat 11610 - Indonesia
Tel : +6221 5890 9530/31
Email: sales@exalummetal.com

www.exalummetal.com

